bePRO

POWER METER FOR CYCLING

0259-0900_R12

EN

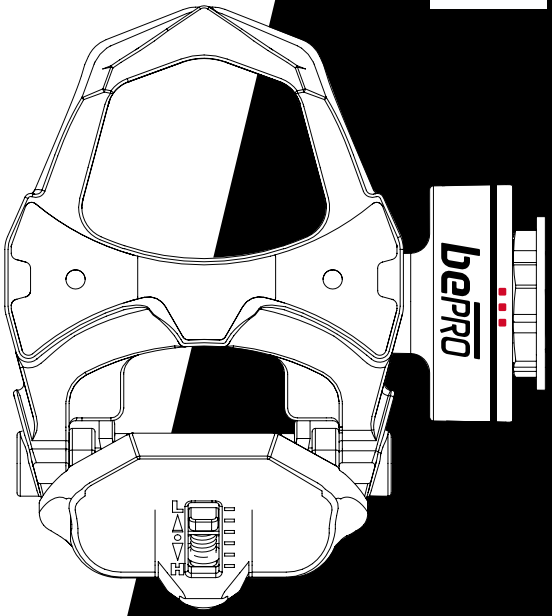

USE AND INSTALLATION MANUAL

ANT+ PWR

PACKAGE CONTENT

bePRO version: left and right pedals with power sensor.
bePRO Ⓢ version: left pedal with power sensor, right pedal without power sensor.

- Left pin, right pin and template for application of alignment label.
- Template for application of alignment labels.
- 8 mm hexagonal wrench.
- 21 mm combination wrench.
- 4 **bePRO** alignment labels, (2 labels for **bePRO** Ⓢ).
- 4 washers.
- 2 red cleats (6°).
- Battery charger with: EU, US, UK, AU plug adaptors (IEC Types C, A, G ,I).
- 2 USB/micro USB cables (2 meter-long) (1 cable for **bePRO** Ⓢ).
- 2 micro USB protective port covers (1 cover for **bePRO** Ⓢ).
- Safety manual.
- Guarantee (to be completed and kept with the purchase receipt).

1. Quick start

- Stick on the alignment label (Chap. 4.1 e Chap. 4.2).
- Install **bePRO** (Chap. 4.3).
- **Check the position of shoes and cleats respect to bePRO sensor (Chap. 7).**
- Recharge completely the batteries (Chap. 9).
- Switch on **bePRO** (Chap. 8).
- In case of first use, connect **bePRO** with your cycling computer, (Chap. 12), configure the fields related to power (Chap. 13) and set the crank-arm length (Chap. 14).
- Replace the cleats by using the ones that come with the product or Look Keo original ones.
- Check cleats position with respect to **bePRO** sensor (Chap. 23).
- Perform the static calibration, **before each use** (Chap. 15).
- Perform the dynamic calibration (Chap. 16) after every installation.

2. Warnings

- Please carefully read this manual and the safety manual before installing the product. An incorrect installation may lead to accidents and possible damage to things and/or injury to people.
- If you have any doubts about your ability to install the product, we recommend you ask for the assistance of a specialized mechanic.
- It is advisable to tighten the lock nut using a torque wrench (with 3/8” adaptor) with the specific optional tool art. 771-82.
- An incorrect installation may cause or result in irreparable damage to the product not covered by the guarantee. Tightening with a torque lower than 35-40 Nm may compromise alignment and therefore the sensor’s precision.
- Do not use **bePRO** with standard walking shoes without cleats as this may cause irreparable damage to the sensor.
- Do not use **bePRO** with cleats that are different from the ones supplied or Look Keo original ones. The sensor could be irremediably damaged (Chap. 7 e Chap. 23).

3. Product description

bePRO is a pedal for racing bicycles with a hooking system compatible with the LooK Kéo standard and provided with strain gauges to measure the force applied to the pedal.
This pedal includes the function of a the cadence meter and can calculate the power of a single leg in real time, sending it 4 times a second to the bicycle computer.
It is compatible with the ANT+ PWR standard, rechargeable and completely waterproof.

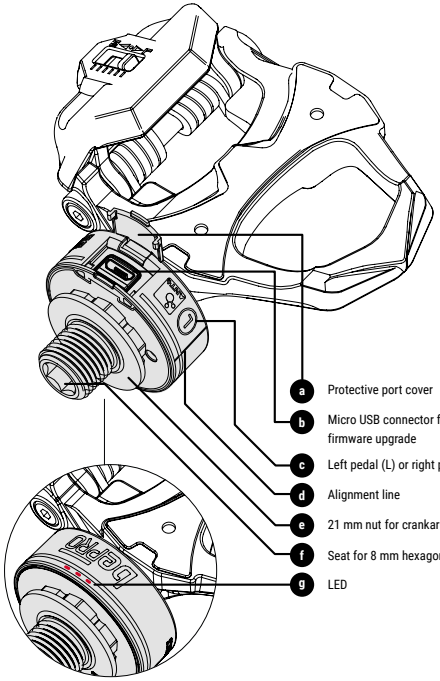

Visit YouTube channel: ***Favero Cycling***
www.youtube.com/c/Favero_cycling
to see the detailed video installation.

4. Application of the alignment labels

4.1. Crank-arm preparation

Remove the existing pedals and clean the crank-arm ends, where the label will be applied, with a natural detergent.

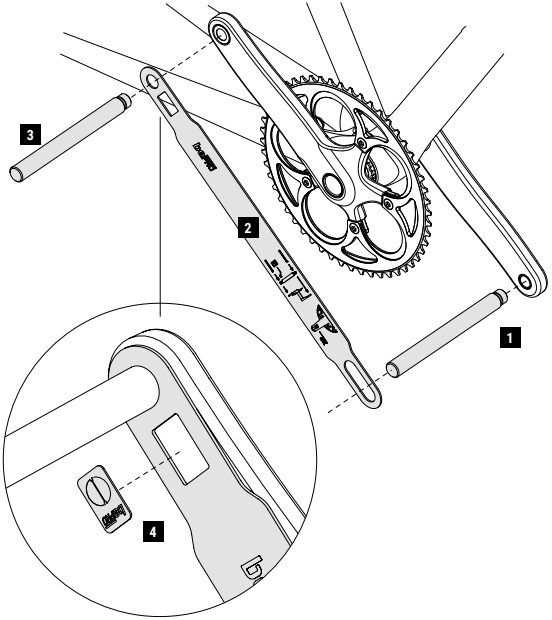

4.2. Application of the bePRO alignment label

Use accessories **1** , **2** and **3** provided to apply label **4** for the alignment of the sensor. Repeat the operation for both crank-arms if you are using the version with double sensor.

5. bePRO installation

5.1. bePRO preparation

Take lock nut **5** and washer **6** from the **bePRO** package (The use of washers is required when in the crank is present the appropriate housing or in case the nut touches the crank unevenly.

For more information see the "**Washer application rules**" (Chap. 24).
or www.bepro-favero.com/manuals/00771-D35-ML-03 Washer application rules.pdf

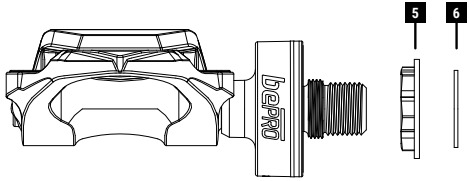

5.2. Lock nut tightening

Manually tighten nut **5** towards **bePRO**, **but without forcing**, up to its end of stroke**.**
The distance left between the nut and bePRO will be less than 1mm.

DO NOT use wrench **10** for this operation as you may damage the power meter irreparably.

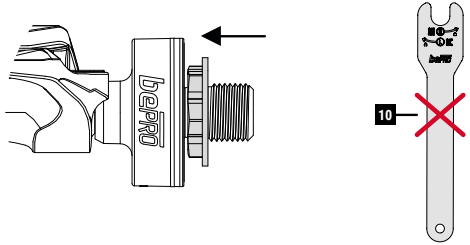

5.3. bePRO tightening

Manually tighten **bePRO**, but without forcing, until it is in contact with the crank-arm.

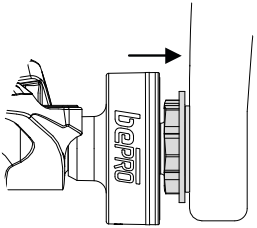

NB:
- *tighten the right pedal to the crank-arm screw **clockwise**;*
- *tighten the left pedal **counter clockwise**.*

5.4. bePRO alignment

Manually loosen **bePRO by hand** until alignment line **7** perfectly matches with label line **8**.

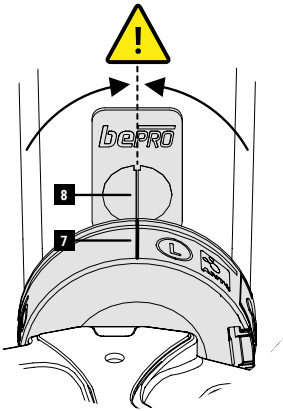

5.5. Lock nut tightening

IMPORTANT RECOMMENDATIONS:

- Pay careful attention when screwing lock nut **5** on the crank-arm. Rotating the lock nut in the wrong direction will irreparably damage the power meter.
  Any damage caused shall not be covered by the warranty.
- To tighten the **RIGHT** pedal, turn the lock nut **5** **counter-clockwise**, in the opposite direction of a normal lock nut.
- These recommendations must be kept in consideration for future product installations and removals. We suggest these recommendations are passed on to your mechanic in case of maintenance to the pedals or bicycle.
- The rotation directions indicated in this Chapter are valid when the pedals are watched frontally in the position shown in the following pictures.
- Failure to observe the recommendations included in this Chapter will void the warranty.
- To see the detailed installation video, please visit the www.bepro-favero.com website.

When performing the procedure described below, keep line 7 and 8 aligned; minimum misalignments can be compensated with a dynamic calibration (Chap. 15).

To tighten the **LEFT SIDE** pedal:

- grip the wrench **9** with your **left** hand, insert wrench in the rear part of **bePRO** at an angle similar to that shown in the picture and hold it firmly to maintain a perfect alignment;
- hold wrench **10** in your **right** hand at an angle similar to that shown in the picture and tighten the lock nut **CLOCKWISE** taking care to remain within the grey highlighted area shown in the picture during closing movement. For the correct tightening direction, refer to the indications for pedal **L** on the wrench;
- start tightening the lock nut slowly, holding wrench **9** firmly to maintain the alignment;
- If necessary, correct the alignment using only wrench **9**; If the lock nut is locked, never use wrench **10**, but **slightly** loosen the entire pedal by using only wrench **9** and repeating the procedure described in Chap. 5.2;
- when the lock nut is almost tightened on the crank-arm, complete the installation by applying a force of about 35-40Nm [1].

[1] *This torque corresponds to a force of about 20kg applied to wrench* **10** *end, which would be the maximum force a person can normally exert.*

R

To tighten the **RIGHT SIDE** pedal:

- hold wrench **9** in your **right** hand and insert it in the hole on the back of **bePRO** at an angle similar to that shown in the picture. Hold the wrench firmly to maintain a perfect alignment;
- Hold wrench **10** in your **left** hand at an angle similar to that shown in the picture and tighten the lock nut **COUNTER-CLOCKWISE** taking care to remain within the grey highlighted area shown in the picture during closing movement; For the correct tightening direction, refer to the indication for pedal **R** on the wrench;
- start tightening the lock nut slowly, holding wrench **9** firmly to maintain the alignment;
- If necessary, correct the alignment using only wrench **9** ; If the lock nut is locked, never use wrench **10** , but **slightly** loosen the entire pedal by using only wrench **9** and repeating the procedure described on Chap. 5.2;
- when the lock nut is almost tightened on the crank-arm, complete the installation by applying a force of about 35-40Nm [1].

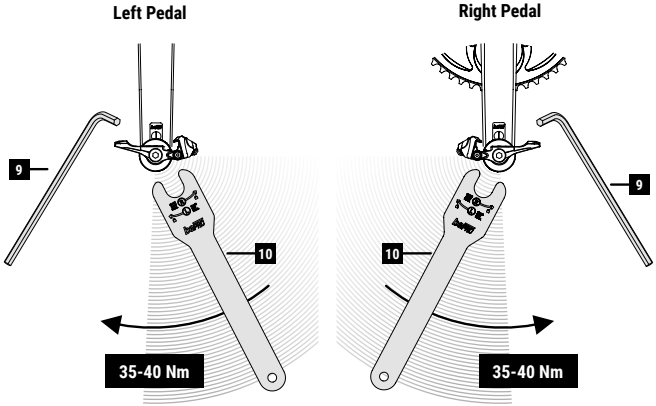

i

A torque of less than 35-40Nm could lead to a rotation of the pedal after a few rides and the consequent misalignment of lines 7 and 8 . In no case this will be a risk for the person or the bicycle. The tightening torque is not related to the accuracy of the power measurement. Minimum misalignments can be corrected with a dynamic calibration.

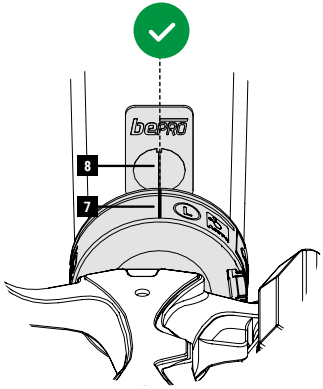

5.6. bePRO alignment check

After installation, check the correct alignment of lines **7** and **8** as shown in the picture.
A minimum misalignments can be corrected with a dynamic calibration (Chap. 16).
The misalignment is acceptable if the dynamic calibration result is successful. In this case it's not necessary to repeat the alignment of the pedals.

If, after few rides, you'll notice a misalignment between lines **7** and **8**, repeat the dynamic calibration (Chap. 16): if the dynamic calibration result is successful, it will not not be necessary to repeat the alignment of the pedal.

6. bePRO removal

To remove **bePRO** use **EXCLUSIVELY** wrench **9** :
- turn the LEFT pedal **CLOCKWISE** (watching frontally like in figure);
- turn the RIGHT pedal **COUNTER-CLOCKWISE** (watching frontally like in figure).

Never loose the lock nut with wrench 10 . Use only the hexagonal wrench 9 .

7. Cleats and shoes

Carefully read and follow the instructions to avoid accidents and possible damage to things and/or injury to people.

Use only the supplied cleats or original LOOK KEO cleats.
The use of compatible cleats may be unsuitable and may be a cause of damage to the product. In such case, the damage will not be covered by the warranty (Chap. 23).

Before using bePRO, fix and regulate the cleat and hook the shoe to the pedal to verify that the shoe sole does not get in contact with **bePRO** sensor.
We recommend to keep a minimum clearance between the sole of the shoe and the sensor of 2-3mm at least as shown in the figure.

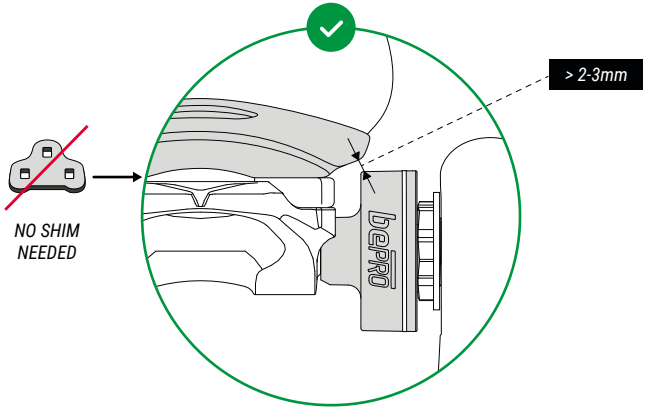

In case you have not enough clearance, change the cleat position by moving it properly or insert a shim between cleat and sole.

Do not use the product if you notice that the sensor is in contact with the shoe or with cleats, because the product may be irreversibly damaged, causing the loss of warranty.

Some shoes have a completely flat sole; in this case check carefully the clearance between sensor and sole of the shoe and use appropriate shim.

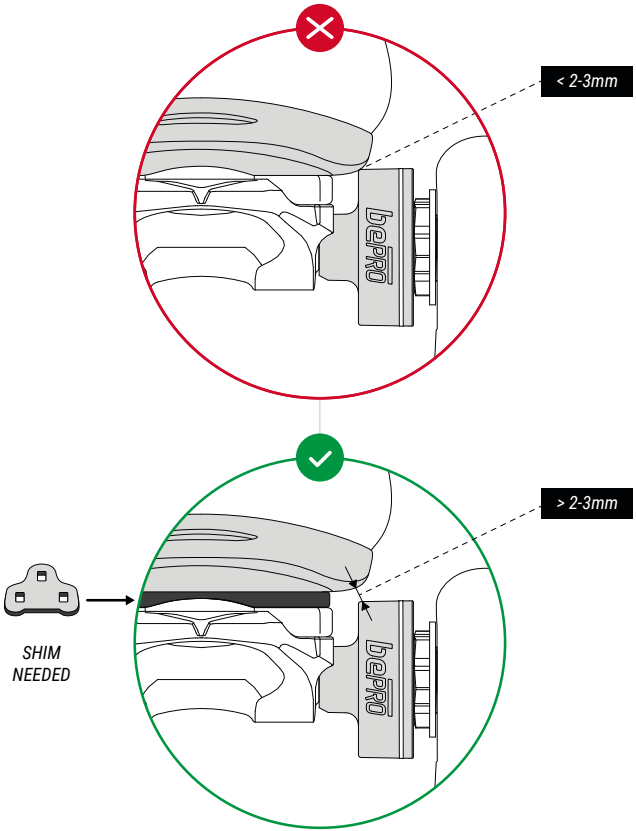

7.1 - Cleat fitting

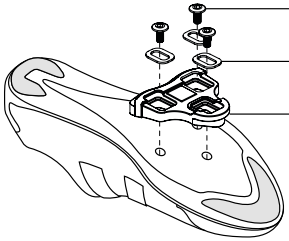

Recommended tightening torque:
5 Nm or 4.5 in-lbs

7.2 - Adjustment of the clip-less mechanism tightness

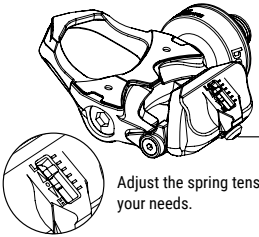

The spring force can be adjusted using the screw shown in the picture. To tighten, turn clockwise: to loosen, turn counter-clockwise.

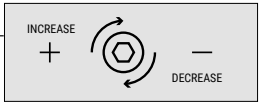

3 mm hexagonal wrench (not supplied)

8. Switching on and off

The first time you switch bePRO on, connect the battery charger supplied to an electrical socket and disconnect it after few seconds: bePRO will switch on.

Switch **bePRO** on by manually turning the pedals or cycling at a cadence lower that 60 rpm; LEDs will rapidly blinking for 2 seconds. The bicycle computer should automatically detect the **bePRO** sensor; if it doesn't, check the connection to the computer (Chap.11). **bePRO** will automatically switch off after 5 minutes of inactivity and automatically switch on when cycling at a cadence lower than 60 rpm.

9. Battery recharge

bePRO has a rechargeable lithium-ion battery with a 30 hour life with normal use. The effective battery life may decrease due to some factors, such as incorrect charging procedures, number of recharges, external temperature, etc.

The capacity of the internal batteries may gradually decrease if they are continuously discharged until completely exhausted. **Instead, frequently charging the batteries (included when they are partially charged) helps preserve their capacity during the product operating life. If the product is not used for long periods, recharge at least every 4 months, otherwise there would be risk of damaging the product irretrievably.**

Before starting, make sure that the micro USB connector port covers are well closed. In any case, the micro USB connector port is watertight and, even without the covers, the product is perfectly safe and protected against water infiltrations.

While charging, ensure that the two cables are not pulled tightly!
This may damage the **bePRO** micro USB connector!

When the batteries are discharged, a warning is displayed on the bicycle computer. After the first low battery warning, the remaining battery life will be of about 4 hours.
To charge the batteries follow the procedure below:
- connect the battery charger supplied to an electrical socket
- connect the two micro USB cables to the battery charger
- open the micro USB connector covers of the **bePRO** sensors
- connect the two micro USB cables to the pedal connectors; the LEDs will switch on
- during charging, the pedals will blink approximately every 2 seconds (Chap. 10); when the charging is complete, the pedals will switch off.

The complete charging of a completely discharged battery lasts about 6 hours.

10. LED behaviour

At switching on:	• Fast blinking for 2 seconds
During normal operation:	• Blinking every 5 seconds. (This function can be disabled using the bePRO Updater application.)
During battery charging:	• Fast blinking: battery almost discharged • Two fast blinks: battery half charged • Three fast blinks: battery completely charged • Switched off: charge completed.
After dynamic calibration:	• Blinking every 5 seconds: dynamic calibration successful result. (Any misalignment has been automatically compensated.) • Fast blinking for 0,5 seconds of one or both pedals: dynamic calibration unsuccessful result. (The misalignment is too much to be compensated.)

11. Compatible bicycle computers

bePRO is compatible with all ANT+™ bicycle computers which have Bike Power (PWR) profile. For the complete list of the ANT+™ certified products, visit the website: http://www.thisisant.com/directory/ (select "Bike Computers" in Categories).

It is advisable to install the latest firmware version available from the manufacturer of the bicycle computer!

12. Pairing to bicycle computer

Pairing is the procedure which makes it possible to connect **bePRO** to the bicycle computer. Pairing is based on an identification number consisting of 5 digits (e.g.: ID=00356) which is different for each power sensor. The ID number is indicated on exterior of the package. Switch on the bicycle computer and then **bePRO** (Chap. 8).

Important warnings to avoid communication problems:
- Make sure that there are no other ANT+™ power meters in the vicinity (10m)
- The bicycle computer must be within 2m from the **bePRO**
- For some bicycle computers, it is advisable to temporarily disable all the other ANT+ sensors (heart-rate, cadence, ...).

12.1. Automatic pairing
Read the bicycle computer manual to learn how to activate the scan procedure. The “Scan” or “Search” button is normally available on the menu:
Settings - Bike settings - Bike profile - (profile name) - ANT+™ Power
- Within 5 minutes after having switched **bePRO** on, activate the search for new sensors on the bicycle computer.
- Wait for **bePRO** to be detected.

12.2. Manual pairing (recommended)
Within 5 minutes after having switched **bePRO** on, manually enter the ID (indicated on exterior of the package) in the specific page of the bicycle computer (read the computer manual).

13. Power fields configuration

After pairing (Chap. 12), the bicycle computer must be configured to display the power data transmitted by **bePRO**: read the computer manual.

At least the following data should be set: 3 second power, 30 second power, cadence, 30 second average balance. It is also possible to set the following parameters: TE and PS (not available in the **bePRO** Ⓢ version), average pedal stroke power, TSS, IF, Watt/kg power, Np power, power zone, % power, average balance, etc.

Disable, or better remove, the external cadence sensor: **bePRO** transmits the cadence autonomously.

14. Crank-arm length

The crank-arm length affects power calculation: an incorrect value will lead to incorrect power values. The factory default length is 172.5 mm.
The crank-arm length can be changed using the bicycle computer (read the computer manual) or the software **bePRO Updater** (Chap. 18).

The bicycle computer might update the **bePRO** crank-arm length on the basis of its internal value.
Therefore, always set the correct crank-arm length also on the bicycle computer.

Some bicycle computers may not have the above function; in this case, set the value using **bePRO Updater**.

15. Static calibration

Perform a static calibration just before starting to cycle or a few minutes after cycling has begun. With the static calibration it is possible to obtain the maximum accuracy on measuring power. Read the bicycle computer manual to learn how to start the calibration procedure.

PROCEDURE: The "Calibrate" button is normally available on the menu:
Settings - Bike settings - Bike profile - (profile name) - ANT+ Power

- Switch **bePRO** on.
- Release shoes from the pedals and get off the bicycle.
- Place the crank-arms in the vertical position.
- Using the bicycle computer, disable all ANT+ sensors not installed on the bicycle (for example: cadence sensor, heart rate belt, etc.) because they may slow down or prevent the calibration procedure.
- Calibrate by pressing the "calibrate" button on the power meter menu of the bicycle computer.
- If the number displayed by the computer is not 0 (zero) or an error is reported, repeat the calibration.

16. Dynamic calibration

The dynamic calibration enables **bePRO** to accurately check the mechanical alignment of the pedals and compensate any small misalignment.
It must be carried out every time **bePRO** is installed, and repeated for highest precision in the following cases:
- after the first intense workout;
- if you notice anomalous values for left/right power balancing or TE, PS parameters;
- if you notice a misalignment between lines **7** and **8** (Chap. 5.6);
- every 3-6 months for safety.

Carry out the above procedure in safe conditions (e.g. on rollers or a straight road closed to traffic).

Carry out this procedure on a piece of road without slopes, pot holes, hollows, or irregular surface. When using rollers, make sure that the floor is even and flat and that the wheels are at the same height above the ground.

Procedure:
- select a gear allowing a constant cadence of 80 rpm;
- in the cycle-computer set the screen for viewing data relating cadence and instant power **(Caution: do not use the calibration procedure foreseen in the cycle-computer neither press any button)**;
- to start the procedure, cycle backwards for 10-12 full turns of the pedals continuosly without any interruption at 60 rpm approximately (on both pedals a LED will light up in a steady mode);
- cycle forwards at 80 rpm (± 5 rpm) as regularly as possible without any interruption for at least 40 seconds;

During this phase, the power is not displayed by the bicycle computer.
The procedure automatically stops after about 40 sec., as soon as the bicycle computer displays the power again.

The procedure result is successful if the bicycle computer displays the power again and the LEDs on both pedals will go back to their normal functioning
. Any minimum misalignment is automatically compensated.

The procedure result is unsuccessful if the bicycle computer does not display the power again; check the LEDs of both pedals: a fast blinking every 0,5 sec indicates that the pedal is excessively misaligned to be compensated.
Please, perform the procedure again: if the outcome is still negative, remove the misaligned pedal (or if necessary both of them) as indicated in (Chap. 6) and install it or both as explained in (Chap. 5).

In case of negative outcome or interruption of the pedaling before completing it, the power will always be 0W until the next performed procedure with positive outcome.

The calibration procedure interrupts if the cadence is not included within the 75-85 rpm range or the pedal stroke is irregular, or if the procedure is not completed within a minute.

If, after few rides, you'll notice a misalignment between lines 7 and 8 , or you notice anomalous values for left/right power balancing or TE, PS parameters, repeat the dynamic calibration: if the calibration result is successful, any misalignment is automatically compensated.

Visit YouTube channel: ***Favero Cycling***
https://www.youtube.com/c/Favero_cycling
to see the detailed video.

17. Upgrading bePRO 𝕊 to the bePRO complete system

bePRO 𝕊 measures power only on the left pedal. It is possible to purchase the right pedal with the power meter sensor (art. 771-55) at a later date and therefore pass to a system similar to **bePRO**. The left pedal must be upgraded to pair with the right pedal.

For more information visit www.bepro-favero.com.

18. bePRO Updater software

With **bePRO Updater** software:
- Firmware upgrade of the **bePRO** sensors is possible ;
- Some internal parameters (crank-arm length, etc.) can be set ;
- If **bePRO** 𝕊 is upgraded or one of the two pedals is replaced, it is possible to pair the **bePRO** right and left pedals;
- It is possible to modify determined advanced settings.

To download the **bePRO Updater** software and all the information on its use, visit www.bepro-favero.com website.

19. Inspection and maintenance

Carefully inspect the product before starting a cycling session; check all parts for damage, cracks, loose parts and signs of wear. Do not use the product unless you have carefully checked and replaced any worn or damaged parts.

The use of the product not in perfect conditions may cause accidents and possible damage to things and/or injuries to people as well as causing the early degradation of the product and its performance.

Clean **bePRO** with a damp cloth and remove debris with care.
Make sure that the micro USB connector is clean. While cleaning, make sure that the micro USB connector port cover is well closed. Do not use aggressive chemicals such as: gasoline, gas oil and petrol by-products in general, alcohol, industrial or all-purpose degreasers, etc. Do not use high pressure cleaners. Do not immerse the product. Periodically check that the pedal body nut is correctly tightened. Before every cycling session check that the pedals and cleats are properly working. If the cleats are worn out they may cause accidents: they must be replaced only with original Favero Electronics spare parts. Do not attempt to open or disassemble the product as you may damage it and invalidate the guarantee. Assistance must be carried out only by a specialized technician authorized by Favero Electronics. If the product is not used for long periods of time, it is advisable to remove the pedal from the bicycle and keep it in its original packaging. Store the product in an environment where temperatures are not high and humidity is not excessive to avoid permanent damage to the product. Fully charge at least every 4 months.

20. Spare parts

For more information on spare parts, visit the website www.buy.bepro-favero.com.

21. Copyright

Copyright 2015. All rights reserved.
It is forbidden to reproduce this manual in full or in part unless explicit written consent is obtained from Favero Electronics.
The manufacturer reserves the right to improve or modify the product and this manual without any obligation of prior notice to private users or organizations. **bePRO**® is a registered trademark of Favero Electronics. LOOK and Kéo trademarks belong to LOOK Cycle International. All the other trademarks and registered trademarks belong to their corresponding owners.

22. Washer application rules

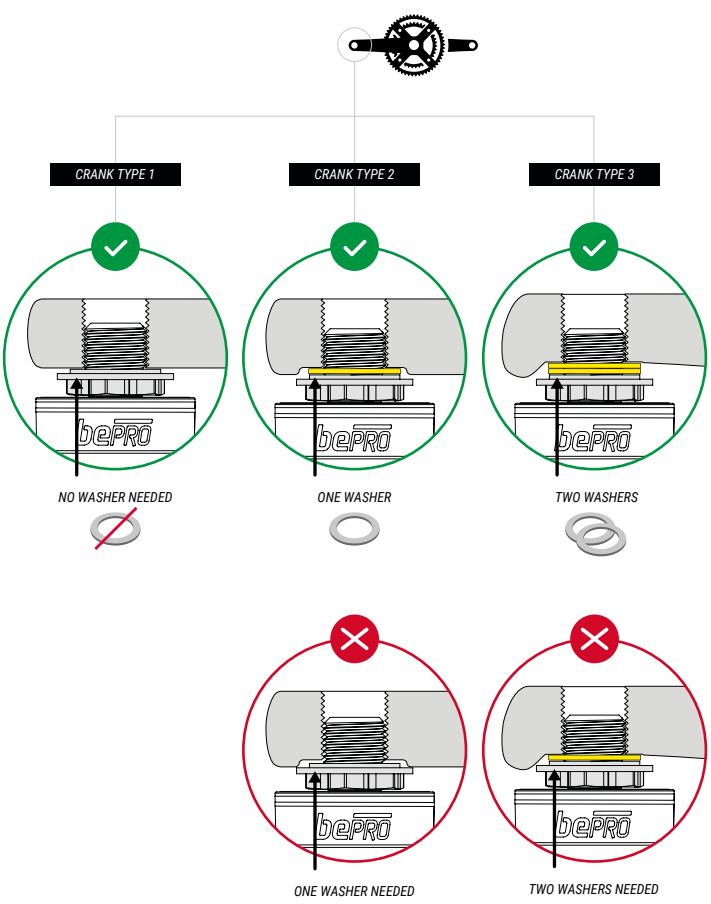

23. Cleat usage rules

Use only the supplied cleats or original LOOK KEO cleats.
The use of compatible cleats may be unsuitable and may be a cause of damage to the product. In such case, the damage will not be covered by the warranty.

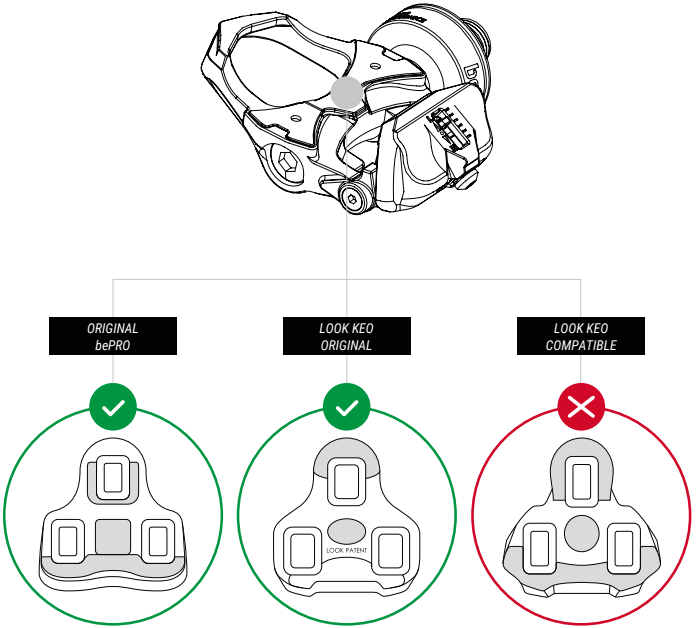

24. Technical characteristics

Product code:	bePRO (art. 771-01), measures left and right pedal power bePRO S (art. 771-02), measures left pedal power
Radio protocol:	ANT+™, 2.4 GHz wireless protocol
Parameters:	instantaneous power (Watt), instantaneous cadence (rpm), L/R balance (%), torque efficiency (TE) [1], pedal stroke uniformity (PS) [1]
Min. and max. power:	0 - 2000 W
L/R balance :	0-100%
Max. and min. cadence:	30 - 180 rpm
Power measuring accuracy:	± 2%
Cadence sensor:	internal integrated
Internal battery:	30-hour life rechargeable lithium battery
Total weight of the pedal with sensor:	156 g
Sensor weight:	16 g
Pedal weight:	140 g
Pedal bolt material:	Cr-Mo steel (15CrMo5)
M16 nut material:	AISI 316L steel ruthenium plated.
Pedal body material:	NEP injection molded
Threading:	9/16"-20 tpi
Bearings:	n.3 sealed cartridge bearings
Minimum and maximum operating temperature:	-10 / 60 °C
Water resistance:	IPX7
Battery charger:	inlet 100-240 V, 50/60 Hz, 85 mA outlets 2xUSB 5V 1,0A
Certifications:	CE, RoHS, ANT+ PWR
Reference standards:	EN14038, EN60950
Compatible cleats:	Look Keo [2]
Max weight of the cyclist:	120 Kg (265 lbs) [3]
Guarantee:	2 years

*[1] Not available for the **bePRO S** version*

[2] The LOOK and Kéo trademarks belong to LOOK Cycle International

[3] This product has been designed for cyclist's weight not higher than indicated.
Using this product by a user exceeding this weight is at his own risk.

This product is ANT+ certified and complies with the following specified ANT+ Device Profiles:
www.thisisant.com/directory

25. Assembly drawing

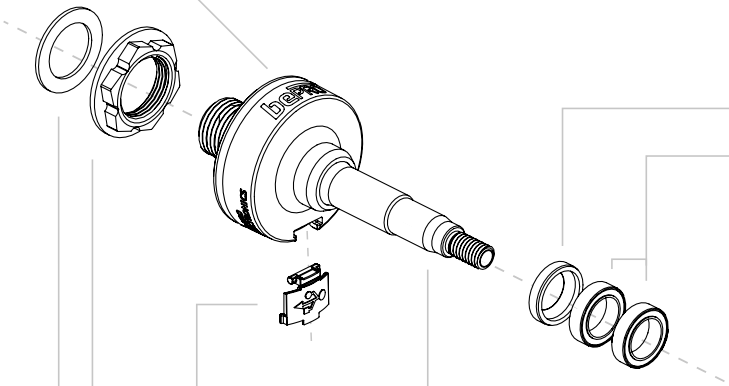

bePRO sensor on left axle	Art. 771-90
bePRO sensor on right axle	Art. 771-91

Lubricate the axle
by using lithium grease

Micro-USB cup	Art. 771-74

Hex nut M16 (35-40 Nm)

Washer

Hex nut M16 and washer	Art. 771-70

Hex nut M6:
- *tightening torque: 35-40Nm*

Bearings, hex nut M6, oil-seal, end-cap	Art. 771-72

Hex nut M6:
- *tightening torque: 8-10Nm*
- *tighten the lock nut clockwise for left pedal*
- *tighten the lock nut counter-clockwise for right pedal*

End-cap:
- *tighten end-cup clockwise for both pedals*

Oil-seal

Bearings 10/15

Left body pedal	Art. 771-60
Right body pedal	Art. 771-65

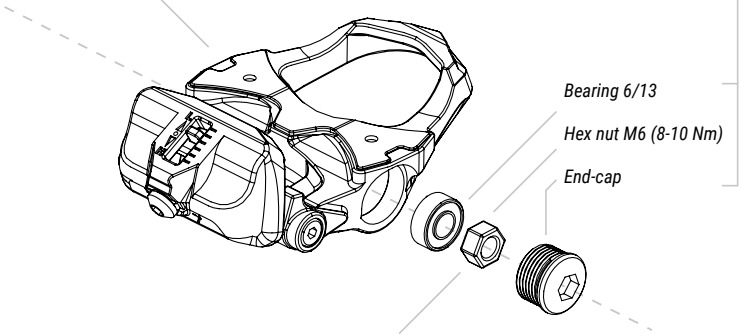

Bearing 6/13

Hex nut M6 (8-10 Nm)

End-cap

Use 9mm (CH9)
socket wrench
with Max external Ø13.

201602191454

For further informations:

www.bepro-favero.com

Favero ELECTRONICS

FAVERO ELECTRONICS Srl
Via R. Lombardi, 64 | 31030 Arcade (TV) - Italy